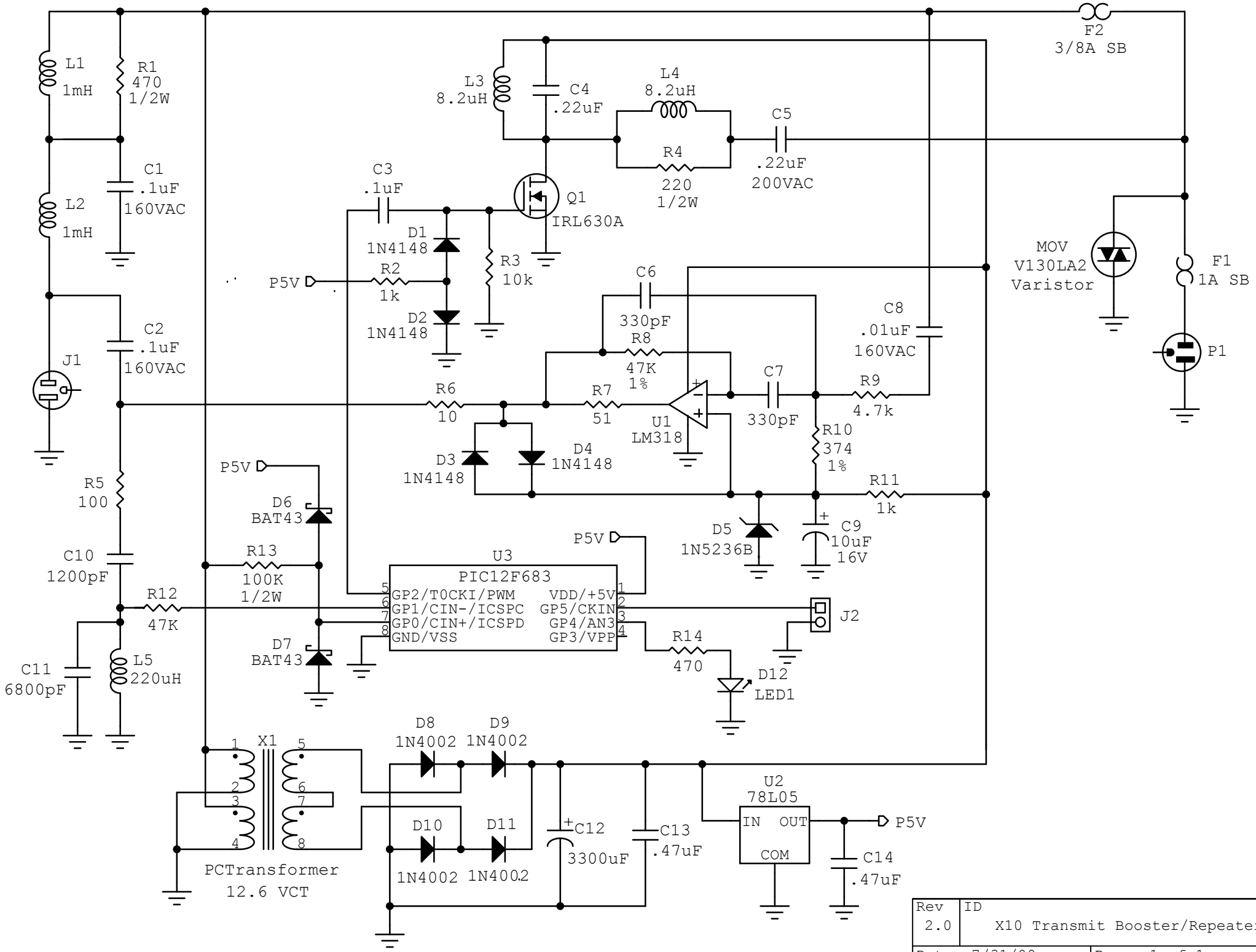

Rev	ID
2.0	X10 Transmit Booster/Repeater
Date: 7/31/09	Page: 1 of 1